GSA GUIDED ROD-STYLE ACTUATOR

Tolomatic™ EXCELLENCE IN MOTION ... MAXIMUM DURABILITY

ENDURANCE TECHNOLOGY℠

A Tolomatic Design Principle

Endurance Technology features are designed for maximum durability to provide extended service life.

The GSA guided screw actuator is ideal for medium thrust applications. The self-contained guided rod design and cylinder slide style operation make this solution ideal for applications requiring guidance and support of the load. A robust, wide tooling plate allows easy mounting of the required end effectors for many applications. Built-to-order in stroke lengths up to 36 in (914 mm) with your choice of screw technology.

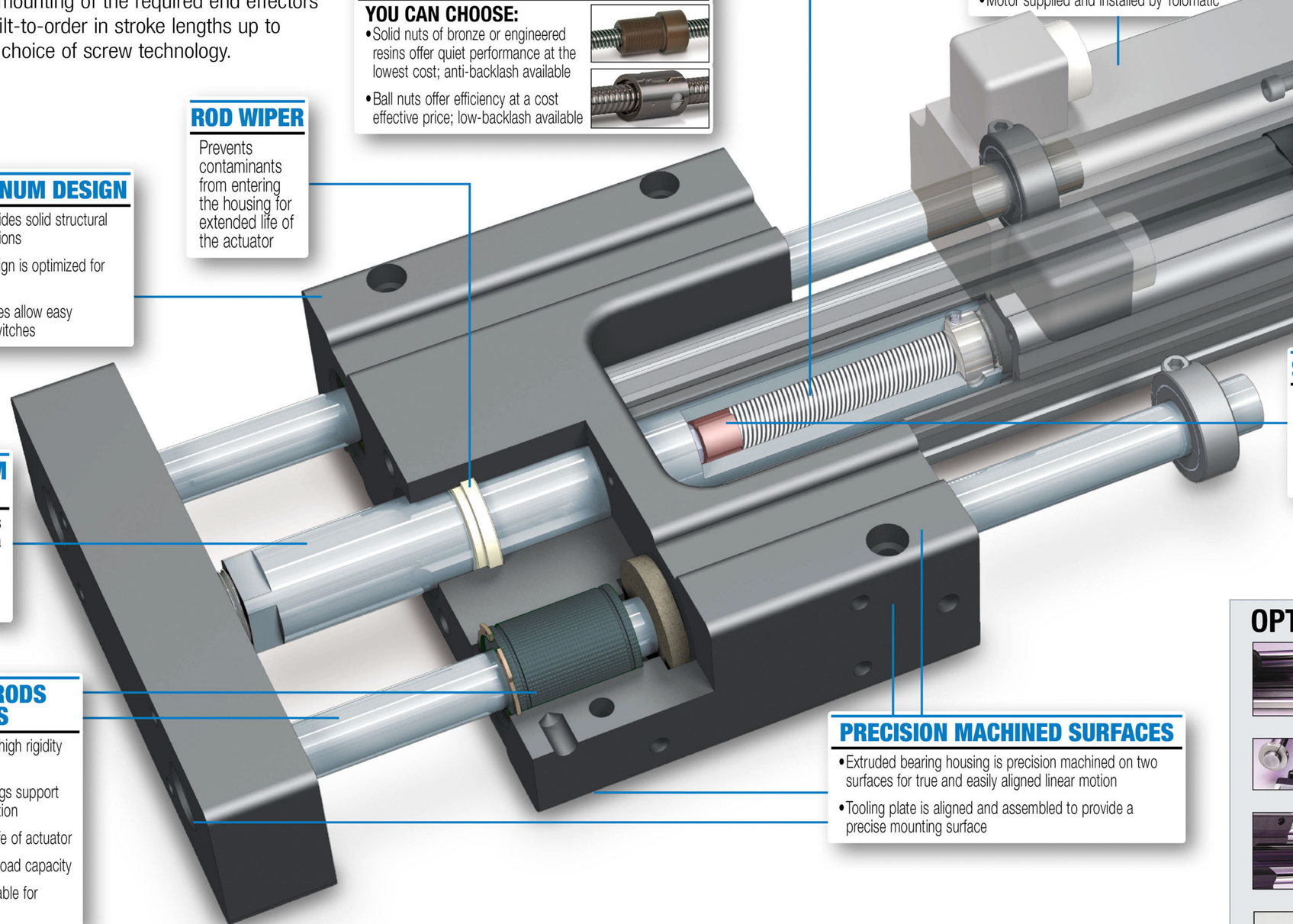

YOUR MOTOR HERE

YOU CAN CHOOSE:

- Specify the device to be installed and actuator ships with proper mounting hardware
- Specify and ship your device to Tolomatic for factory installation
- Motor supplied and installed by Tolomatic

MOTOR ORIENTATION

YOU CAN CHOOSE:

- Inline option directly couples the driving shaft and is typically a one-piece housing construction for optimum alignment and support of the motor
- Reverse-parallel option minimizes the overall length, coupling motor and driving shaft via a belt with a 1:1 or 2:1 reduction ratio

MULTIPLE SCREW TECHNOLOGIES

YOU CAN CHOOSE:

- Solid nuts of bronze or engineered resins offer quiet performance at the lowest cost; anti-backlash available
- Ball nuts offer efficiency at a cost effective price; low-backlash available

ROD WIPER

Prevents contaminants from entering the housing for extended life of the actuator

LIGHTWEIGHT ALUMINUM DESIGN

- Black anodized bearing block provides solid structural support and multiple mounting options
- Black anodized tube extrusion design is optimized for rigidity and strength
- External switch channels on all sides allow easy placement of position indicating switches

SCREW SUPPORT BEARINGS

- Unique high thrust bearing assembly design eliminates runout and isolates the linear forces for the drive shaft
- Engineered resin bearing provides continuous support of screw

ANODIZED ALUMINUM THRUST TUBE

- Lightweight design directly provides thrust with minimal additional inertia
- Corrosion resistant plating provides excellent protection from many chemicals

INTEGRAL GUIDE RODS AND BEARINGS

- Hardened steel guide rods provide high rigidity and low deflection
- Four composite or linear ball bearings support the load for smooth, consistent motion
- Lubrication wick supplies lube for life of actuator
- Oversized rods available for higher load capacity
- Stainless steel shafting option available for corrosion resistance

PRECISION MACHINED SURFACES

- Extruded bearing housing is precision machined on two surfaces for true and easily aligned linear motion
- Tooling plate is aligned and assembled to provide a precise mounting surface

OPTIONS

- **OVERSIZED GUIDE RODS**
  Available for increased load capacity or decreased deflection

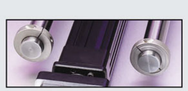

- **STOP COLLARS**
  Provide a positive stop mechanism when required

- **CORROSION RESISTANCE**
  Includes 316 stainless steel guide rods and fasteners for better environmental protection
- **METRIC OPTION**
  Provides metric tapped holes for mounting of load to tooling plate and of actuator to mating surfaces

- **SWITCHES**
  Choose from: Reed, Solid State PNP or NPN, all available normally open or normally closed