Axidyne®
ELECTRIC LINEAR MOTION PRODUCTS

MSD Microstepping Motor Drive
USER'S MANUAL

TOL-O-MATIC, INC
Excellence in Motion®

3600-4053C

© Copyright 1998
Tol-O-Matic, Incorporated.
All rights reserved.
Axidyne and Tol-O-Matic
are registered trademarks of
Tol-O-Matic Incorporated.
1/2000

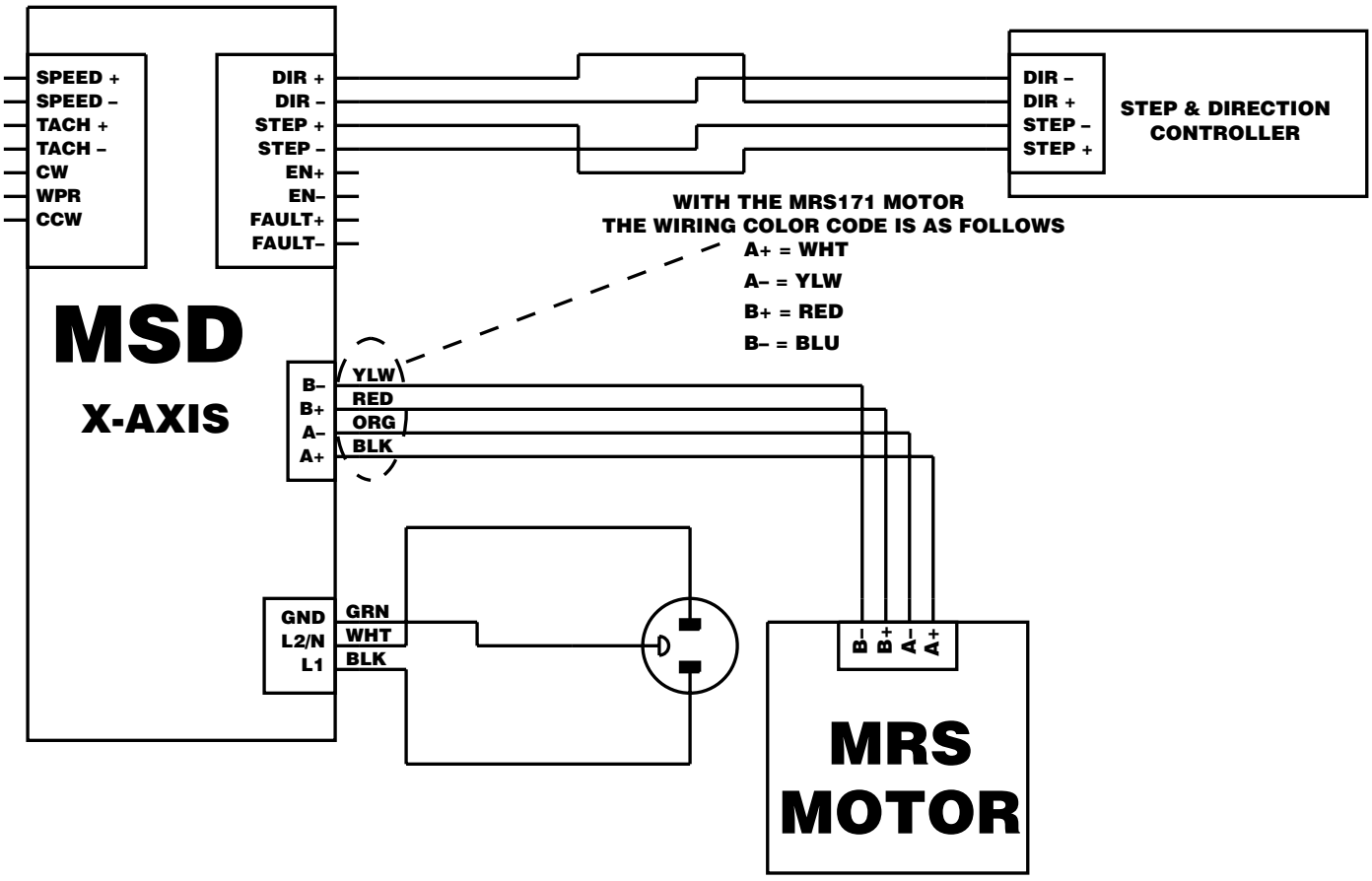

Connection for Pulse and Direction Mode

Contents

Introduction

About this Manual....1
Safety Symbols....1
Features....2
Modes of Operation....4
Getting Started....5

Connections

Connections and Adjustments....6
Connecting an Ac Line....7
Installing an Ac Line Cord....8
Connecting the Motor....9
Connecting Logic....10
Differential Logic....11
Sinking Logic....12
Sourcing Logic....12
Setting up for Joystick Mode....13
Setting up for Oscillator Mode....15
Setting up for Analog Signal (using an Analog Signal)....17
Connecting Digital Inputs and Limit Switches....19
Tach Output....19
Enable Input....19
Using the Fault Output....20

Settings

Setting Phase Current....21
Current Setting Formula....21
Current Setting Tables....22

Special Features

Idle Current Reduction....23
Microstepping....23
Fault Protection....25
Temp....25
Short....25

Technical Specifications

Specifications....26
Dimensions....28

Mounting Information

Mounting the MSD....29
Use and Care....29

Recommended Motors

Motor Data and Dimensions 30
Tol-O-Matic Catalog Motor Summary Data 30
17 Frame Motor Dimensions Speed/Torque 30
23 Frame Motor Dimensions 31
23 Frame Motor Speed/Torque Characteristics 31
34 Frame Motor Dimensions 32
34 Frame Motor Speed/Torque Characteristics 32

About This Manual

This manual provides the information necessary to configure and install the Tol-O-Matic MSD Micro Stepping Drive for use with any of the Tol-O-Matic MRS stepper motors, and with the Tol-O-Matic SSC servo/stepper controller or other step and direction sources.

If you have difficulty configuring, installing, or programming your system, please contact your local distributor for help, or call Tol-O-Matic at 1-800-328-2174.

SAFETY SYMBOLS

The following symbols are used throughout this manual to alert the user to potential safety hazards.

⚠ **Caution!** When this symbol appears, exercise care to avoid the possibility of sustaining slight operator injury or equipment damage.

⚠ ***WARNING! When this symbol appears, exercise extreme caution to avoid an IMMEDIATE DANGER of sustaining severe operator injury or irreparable equipment damage.***

NOTE: Failure to comply with cautions, warnings and requirements in this manual, may result in damage to equipment not covered under Tol-O-Matic warranties.

Features

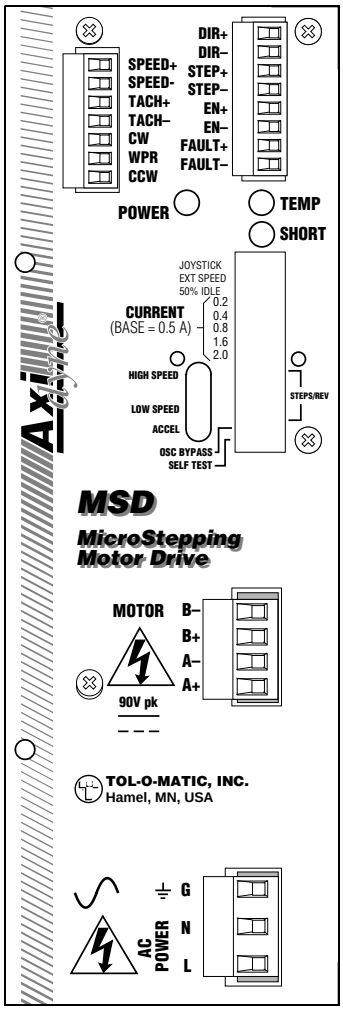

The MSD Stepper Drive is a microstepping chopper drive with integral power supply, packaged in a sheet metal enclosure with heat sink.

- ***Digital oscillator provides smooth accel/decel ramps and precise speed control.***
- ***Powerful microstepping amplifier provides high torque and smooth, quiet motion.***
- ***Accepts a wide range of motors: NEMA sizes 14 - 42, 0.5 to 5.5 Amps peak/phase.***
- ***Easy to configure with on-board switches and potentiometers for all settings.***
- ***Automatic idle current reduction reduces motor and drive heating, saves power.***
- ***Pluggable screw terminal connectors make wiring easy.***
- ***Oscillator Mode operates from internal pots, external pots, 0 - 5V dc analog signal, or analog joystick.***
- ***Two speed ranges, can be selected "on the fly" by a digital signal with automatic ramping between speeds.***
- ***Inputs and outputs are optically isolated, differential (sourcing or sinking). Speed & Enable 5 - 24V dc, Step & Direction 5 - 12V dc.***
- ***Tach Out signal allows easy measurement of speed.***
- ***Enable input allows motor current to be shut off on command.***
- ***Built-in 80 volt power supply (accepts 110 or 220 Vac power, 50-60 Hz).***
- ***MOSFET pulse width modulation switching amplifiers (3 state).***

continued

- ***Microstepping pulse & direction model with 16 step/rev settings from 200 (full step) through 50,800.***
- ***Overtemp and overcurrent (short circuit) and surge protection.***
- ***Built-in self test for troubleshooting.***
- ***CE and TUV compliant.***

Modes of Operation

The MSD has four modes of operation, selected by three dip switches.

Pulse & Direction Mode – the MSD receives step pulses from an indexer such as the SSC. Steps/revolution are set by switches 1-4. This mode is the same as earlier models of MSD.

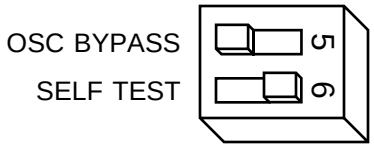

Pulse & Direction Mode

Joystick Mode – speed and direction are determined by an external analog voltage. STEP and DIR inputs can be used for limit switches. SPEED input selects speed range. LO SPEED and HI SPEED pots adjust the 2 speed ranges.

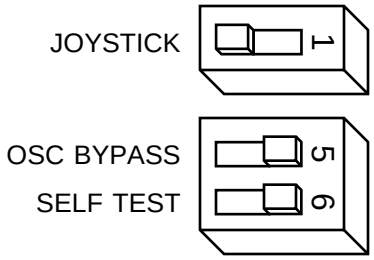

Joystick Mode

Oscillator Mode – speed can be controlled by on-board potentiometers and/or by an external analog voltage. STEP input starts and stops the motor. DIR input controls direction of rotation. SPEED input selects the speed range.

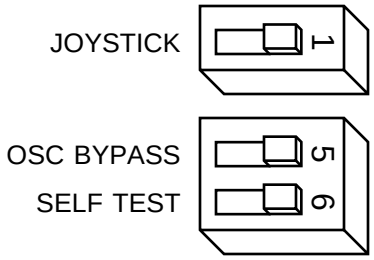

Oscillator Mode

Self Test Mode is used for trouble shooting. If the MSD isn't responding to step pulses, turn on the self test.

Self Test Mode

To activate the self test, slide switch #6 toward the TEST label. The drive will slowly rotate the motor, 1/2 revolution forward, then 1/2 rev backward. The pattern repeats until the switch is moved away from the TEST label. The MSD always uses half step mode during the self test, no matter how the steps/rev switches are set. The self test ignores the STEP and DIRECTION inputs while operating. The ENABLE input continues to function normally.

Getting Started

To use the MSD Microstepping Motor Drive, the following are needed:

- *a power cable (line cord)*
- *a compatible step motor*
- *a small flat blade screwdriver for tightening the connectors*

For pulse & direction mode:

- *a source of step pulses (usually an indexer is used)*

For oscillator mode:

- *an instrument for measuring motor speed (tachometer, freq. counter or o-scope)*

For joystick mode:

- *an analog joystick*

Connections and Adjustments

Refer to Figure 2 for important connection and adjustment points. All mating connectors are included.

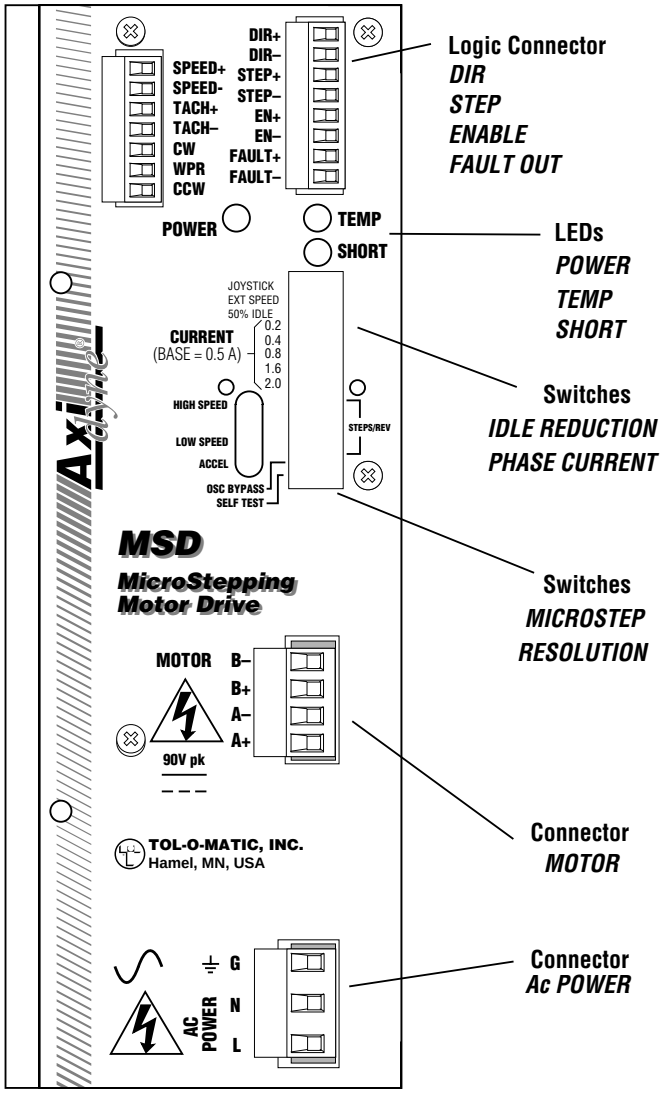

Figure 2 - CONNECTION AND ADJUSTMENT POINTS

Connecting the Ac Line

110 Volts

The MSD is set for 110 Volt operation at the factory. Install a power cord and plug it in. Before direct wiring the MSD to ac power, consult a qualified electrician and observe all building and electrical codes.

WARNING! Ac power can be dangerous. Use extreme caution in installing the ac cord.

220 Volts

The MSD is set for 110 Volt operation at the factory. In order to use 220 Volts, a switch setting inside the case must be changed. This can be done from the outside with a small screwdriver.

Caution! Do not open the MSD case. Do not attempt to change the 110/220 Volt switch setting until the power has been removed from the drive for at least five minutes.

Before changing the 110/220 Volt switch setting, remove the motor connector and the ac power connector from the drive. Set the drive on the widest side, so that the heat sink fins are pointing upward.

Look through the opening in the case located directly above the three position and four position green connectors (see Figure 3)

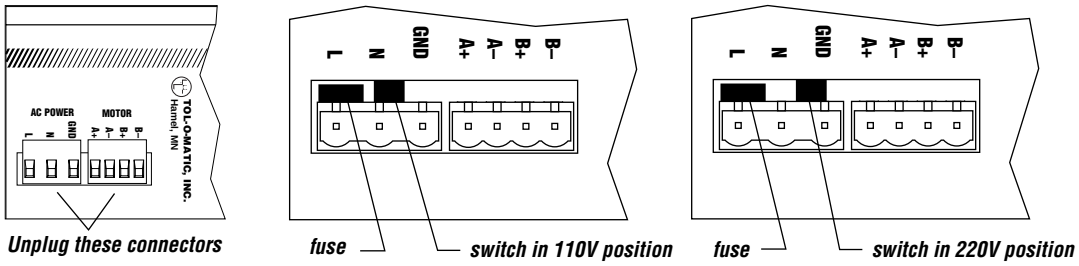

Figure 3 - 200V SWITCH SETTINGS

continued

and observe two black objects. The one on the left is the fuse. The black object to the right of the fuse is the 110/220 V switch. Figure 3 shows the two positions of the switch. To change from 110V to 220V, carefully insert a screwdriver into the slot and push the switch to the right.

INSTALLING AN AC LINE CORD

WARNING! Always use a three-wire power cord when working with ac power. Failure to do so could result in damage to the MSD and/or personal injury or death.

WARNING! Always disconnect the line cord from the source before attaching it to the MSD.

Remove approximately 5 mm ($^{3}/_{16}$ inches) of insulation from each of the three wires of the line cord. Depending on the source, the power cord, may have black, white and green wires or brown/blue/green.

Connections

Refer to Figure 4.

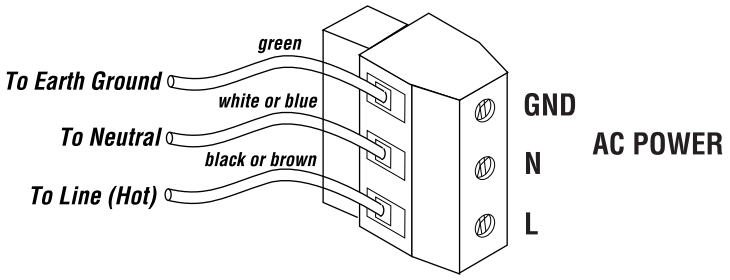

Figure 4 - AC LINE CORD INSTALLATION

1. Connect the black or brown wire to the MSD “L” (line or “hot” terminal of the ac power connector.
2. Connect the white or blue wire to neutral. That’s the “N” terminal.
3. Connect the green wire to the GND terminal. This connects the MSD metal enclosure and dc power supply ground to earth ground.

Connecting the Motor

Caution! To avoid personal injury and/or damaging the MSD:

- Never connect the motor to the driver when the ac power is on.
- Never disconnect the motor while the ac power is on.
- Never connect motor leads to ground or to a power supply.

Tol-O-Matic catalog stepper motors are all four-lead, parallel connected. Four-lead motors should be connected as shown in Figure 5. See pages 25 and 26 for Tol-O-Matic recommended motors.

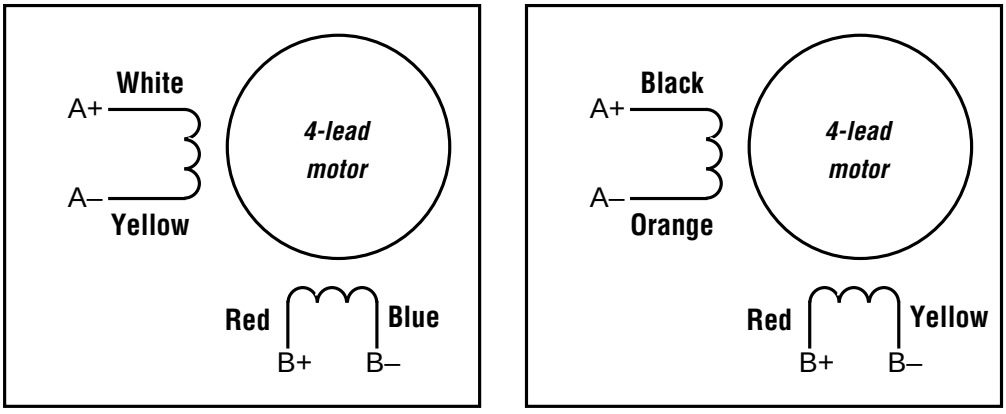

MRS 171 FRAME MOTOR *MRS 23 AND 34 FRAME MOTORS*

Figure 5 - MOTOR CONNECTION

To reverse the rotation at the motor (rather than in programming), reverse the + and - connections of one phase.

(Full Stepping)

Step	A+	A-	B+	B-
0	+	–	+	–
1	+	–	–	+
2	–	+	–	+
3	–	+	+	–
4	+	–	+	–

DIR=1 cw ↓ ↑ **DIR=0 ccw**

(Step 2 is the Power Up State)

Figure 6 - STEP TABLE

Connecting Logic

The MSD drive contains optical isolation circuitry to prevent the electrical noise inherent in switching amplifiers from interfering with your circuits. A schematic diagram of the step input circuit is shown in Figure 7. ***NOTE:*** DIRECTION and ENABLE circuits are the same as STEP.

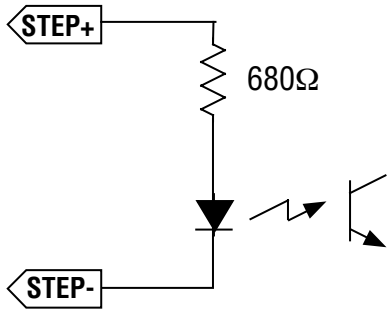

Figure 7 - INPUT CIRCUIT

The logic signals can be sourcing, sinking or both (differential). The input current will be about 1 mA per volt. Thus, if the logic signals are 5 Volts, then logic low, or 0, for a given input, occurs when the + and - signal pins have at least 4 Volts dc across them. In this state the LED is conducting current. Logic high, or 1, occurs when the + and - inputs are less than 1 V apart, or open.

STEP signals the driver to move the motor one step. The drive steps on the falling edge of the pulse. The minimum width is 1 microsecond.

DIRECTION controls which way the motor will turn. (See the Figure 6 for details). The DIRECTION signal should be changed at least 1 microsecond before a step pulse is sent and held for at least 50 µsec after the step pulse is sent. If the controller changes the state of the direction input and sends a step pulse at the same instant, the motor may take a step in the wrong direction.

ENABLE allows the user to turn off the current to the motor by setting this signal to logic 0. The logic circuitry continues to operate, so the drive “remembers” the step position even when the amplifiers are disabled. However, the motor may move slightly when the current is removed depending on the exact motor and load characteristics. If there is no need to disable the amplifiers, it is unnecessary to connect anything to the ENABLE input.

Setting Up for Pulse & Direction Mode

- Connect an indexer/controller to the Step and Direction inputs.
- Set the steps/rev.
- Set the OSC Bypass and Self Test Switches (page 3).

DIFFERENTIAL LOGIC

If the controller has STEP+, STEP-, DIR+ and DIR- outputs, (which many indexers do), connect STEP+ to STEP+, STEP- to STEP- and so forth, as shown in Figure 8.

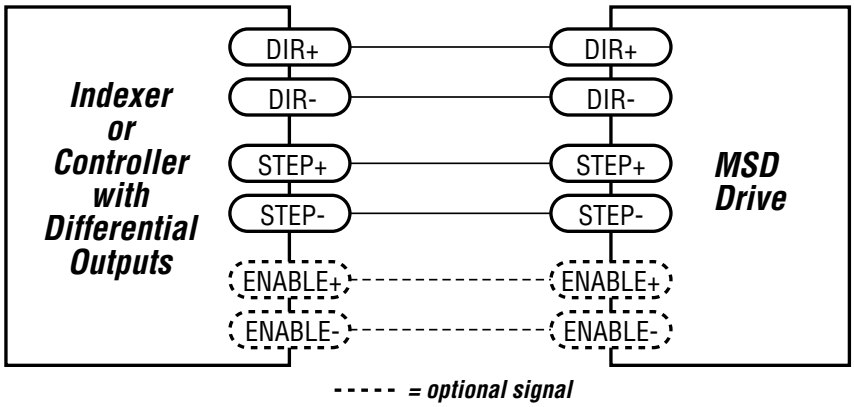

Figure 8 - DIFFERENTIAL LOGIC CONNECTIONS

SINKING LOGIC

If the controller has STEP, DIR and +5V outputs connect STEP+ and DIR+ to +5V, then connect STEP- to STEP. Connect DIR- to DIR as shown in Figure 9. This is the connection to use for the Tol-O-Matic SSC servo/stepper controller.

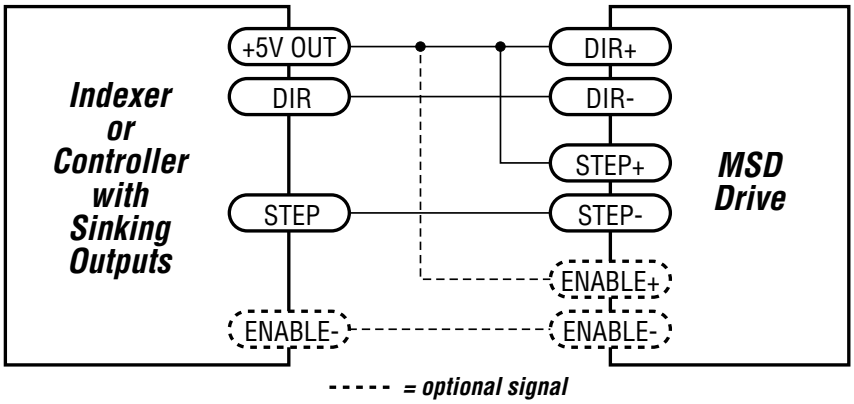

Figure 9 - SINKING LOGIC CONNECTIONS

SOURCING LOGIC

If the controller has STEP, DIR and GND (ground or common) outputs, connect STEP- and DIR- to GND, then connect STEP+ to STEP. Connect DIR+ to DIR as shown in Figure 10.

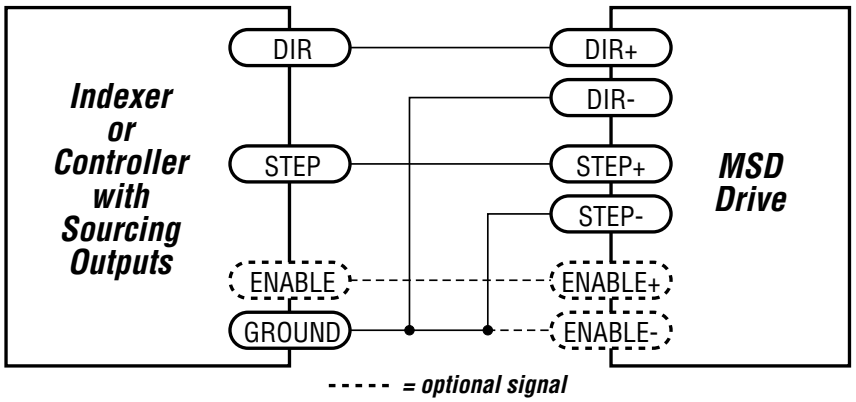

Figure 10 - SOURCING LOGIC CONNECTIONS

If the Logic Voltage is not 5 to 12 Volts...

The MSD optical isolation circuits have built in resistors for 5 - 12 Volt logic. If the logic voltage is greater than 12 Volts but no more than 24 Volts, add series resistors to the signal "+" pins (i.e. STEP+, DIR+, etc.). Use 1/4 Watt, 1000 ohms.

Setting Up for Joystick Mode

In this mode, speed and direction are determined by the voltage applied to the WPR (wiper) terminal. 2.5 Volts is "stopped" (no speed). Increasing the WPR voltage toward 5 volts results in forward motion: speed increases with voltage. Decreasing the WPR voltage from 2.5 toward 0 results in reverse motion, with speed increasing as voltage decreases. In joystick mode, the MSD operates at 12800 steps/rev.

The maximum speed is determined by two things: the state of the SPEED input and the HI SPEED and LO SPEED trimpots. When the SPEED input is ON, the speed range of the joystick can be adjusted with the LO SPEED pot, up to 5 rev/sec (300 rpm). When the SPEED input is OFF (or open), the joystick speed range is adjusted with the HI SPEED pot, up to 25 rev/sec (1500 rpm). Turning the pots clockwise increases the speed.

In joystick mode, limit switches can be connected to the MSP to prevent motion outside of defined limits. The forward limit should be connected to the STEP input and the reverse limit should be connected to the DIR input. When the forward limit is ON, the motor will not move forward (that is, when the joystick voltage is between 2.5 and 5 Volts). When the reverse limit is ON, the motor will not move when the joystick is in the 0 to 2.5 Volt range. If limits are not needed, leave the STEP and DIR inputs unconnected.

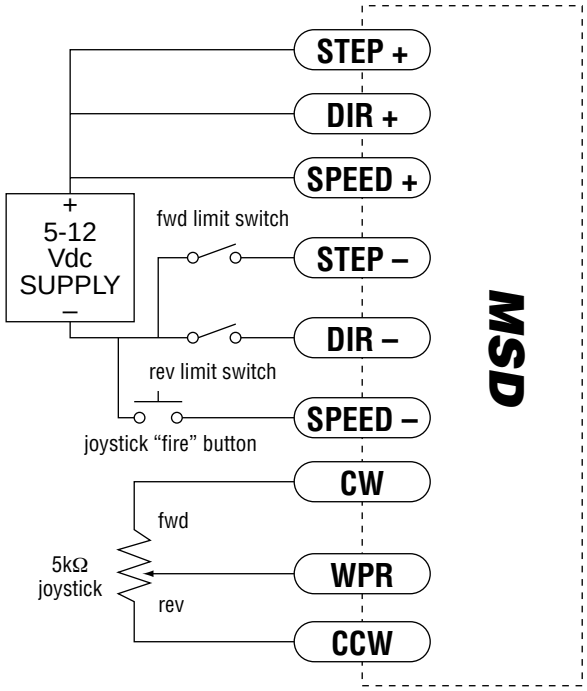

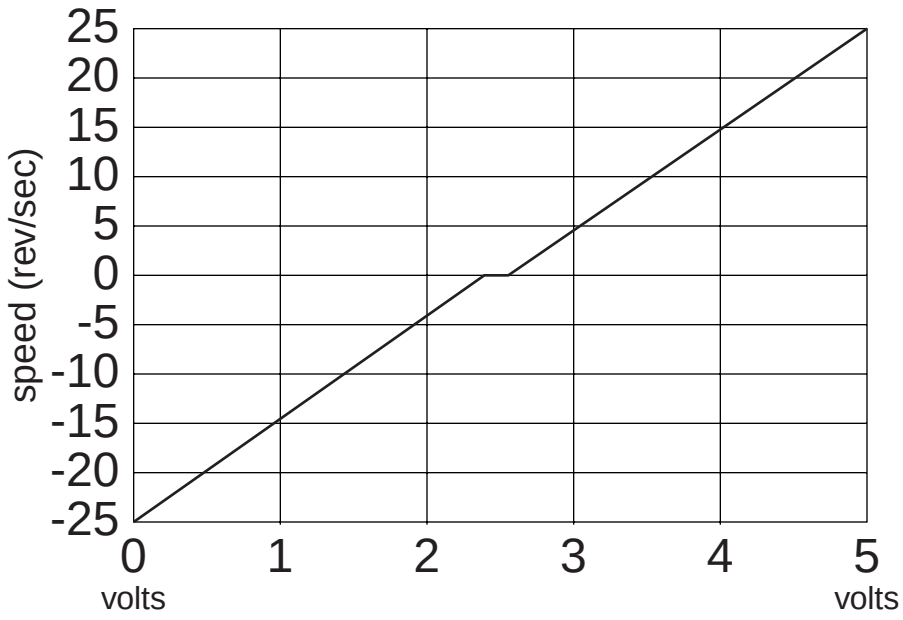

Speed vs Input Voltage

Joystick Mode, SPEED input off (open)
HI SPEED pot at maximum

Setting Up for Oscillator Mode

In oscillator mode, the MSD uses the direction set by the DIR input. Off, or open, gives clockwise motion. Motor speed and the function of the STEP input can be determined from the following table. In oscillator mode, the MSD operates at 12800 steps/rev.

SPEED input	switches 1 & 2	speed set by	when STEP goes ON	when STEP goes OFF
ON	joystick ext speed	LO SPEED	accel to speed	instant stop
ON	joystick ext speed	LO SPEED	accel to speed	instant stop
OFF/open	joystick ext speed	HI SPEED	accel to speed	decel to stop
OFF/open	joystick ext speed	**WPR input** trimmed by HI SPEED	accel to speed	decel to stop

There are two speed ranges in oscillator mode. One is the low speed range, which is activated when the SPEED input is on. The low speed can be set from 0 to 5 rev/sec (0 - 300 rpm) by adjusting the LO SPEED pot. Turning the pot clockwise increases the speed.

The high speed setting is used when the SPEED input is off, or open. If switch #2 is toward the words EXT SPEED, then the high speed is proportional to the voltage applied to the WPR terminal, and is trimmed by the HI SPEED pot. Connect an external 1K - 5K pot to the WPR, CW and CCW terminals, or apply a 0 to 5 Volt analog signal to the WPR terminal (ground the analog signal to the CCW pin). The high speed range is 0 - 25 rev/sec (0 - 1500 rpm). Reduce the range by turning down the HI SPEED pot. For example, if the motor is to go 750 rpm when the external pot is on maximum, turn the HI SPEED pot down about half way.

When switch #2 is away from the EXT SPEED label, the high speed is set by the HI SPEED pot and the WPR input does nothing.

Never apply more than 5 Volts dc or less than 0 Volts to the WPR pin.

In joystick and oscillator modes, the accel/decel rate is set by the ACCEL pot.

The range is 1 to 250 rev/sec/sec. Turning the pot clockwise makes the motor start and stop faster, but if set too high the motor may run out of torque and stall.

In nearly all cases, the accel/decel rate set is respected by the MSD. For example, if the speed is switched while the motor is moving, the drive will change speeds smoothly. When operating in EXT SPEED mode and a sudden change is made in the voltage to the WPR terminal, the drive accelerates (or decelerates) to the new speed smoothly, according to the accel pot setting.

The only time the drive makes an instant change is when the SPEED input is on and the STEP input goes off. That is done so that the MSD can stop instantly (and exactly) from a low speed.

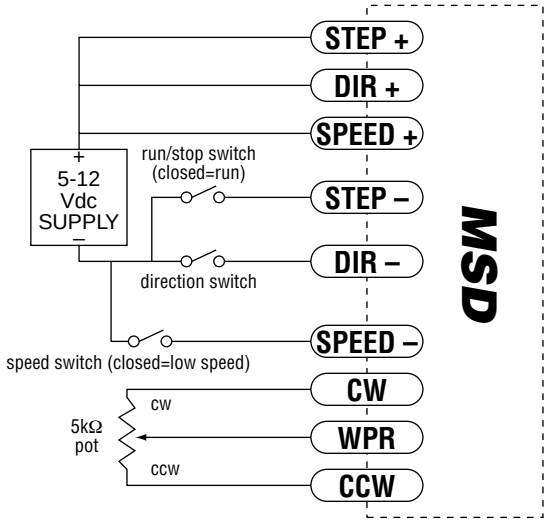

Typical Wiring for Oscillator Mode Using External Speed Control Pot

Setting Up for Oscillator Mode (using an Analog Signal)

In oscillator mode, the MSD can rotate the motor at a speed proportional to an analog voltage. The voltage must be applied to the WPR terminal. The direction of rotation is controlled by the digital DIR input and the motor can be stopped either by setting the analog input voltage to 0 or by turning the digital STEP signal off.

To use the MSD in this mode, set switch #1 away from the JOYSTICK label, and set switch #2 toward the EXT SPEED label.

The HI SPEED pot sets the maximum speed (the motor speed when the analog signal is at 5 Volt DC). The range is 0 - 25 rev/sec. Wiring diagrams and a plot of speed vs voltage are shown below.

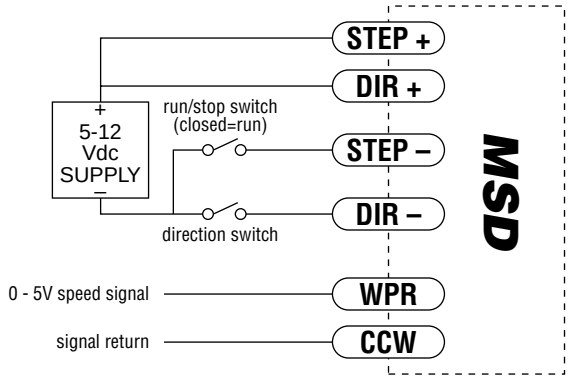

Wiring for Speed Control by 0 - 5 Volt Analog Signal (with Dir Control)

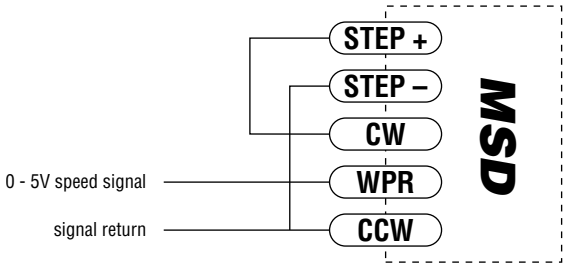

Wiring for Speed Control by 0 - 5 Volt Analog Signal (Unidirectional)

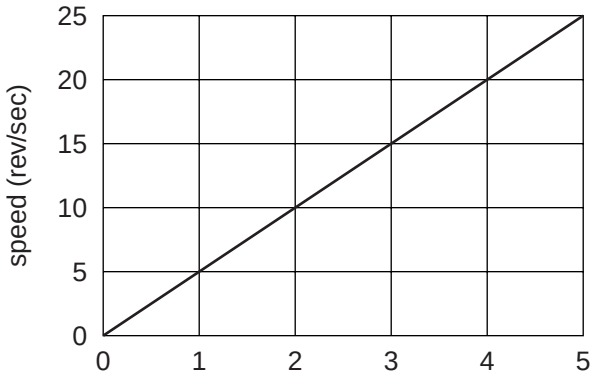

Speed vs Input Voltage

EXT SPEED mode, HI SPEED pot at maximum

Connecting Digital Inputs and Limit Switches

The MSD contains optical isolation circuitry to prevent the electrical noise inherent in switching amplifiers from interfering with your circuits. This arranagement also allows a wide range of input voltages to be used and allows the option of using sinking or sourcing inputs.

A schematic diagram of the input circuit is shown on the next page.

A 5 - 12 Vdc power supply must be used to supply current to the LEDs on the input side of the optoisolators. 24 Vdc is acceptable for the SPEED and ENABLE inputs. The STEP and DIR inputs can be operated at 24V if a 1000 ohm resistor is added to each input. Most CMOS and open collector TTL devices are directly compatible with this drive, as are typical PLC and proximity sensor outputs.

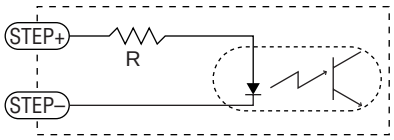

MSD Input Circuit

SINKING CIRCUITS (NPN)

If the output devices prefer to sink current, then connect the "+" terminals to the positive power supply, and the "–" terminals to the signals (i.e. STEP–, DIR–, etc.). If a TTL circuit is used to drive the MSD, connect the "+" terminals to the 5 Volt bus. No ground connection is needed. If a PLC or proximity sensor is used, an external power supply is needed.

SOURCING CIRCUITS (PNP)

If the output devices can only source current (some PLC outputs are this way), connect the "–" terminals to the ground of the dc power supply that powers the output circuits. Then connect the signals to the "+" terminals (STEP+, DIR+, etc.).

NOTE: We refer to an input as being ON when current is flowing through the input. A signal is OFF when no current is flowing. An input is OFF when COM and the input terminal are at the same voltage, or when the input is left unconnected (open).

Tach Output

The Tach Out signal is provided for measuring the motor speed. It generates 100 pulses per revolution, so if a frequency counter is connected, the speed will read out in revs/second with two decimal places.

Do not connect the Tach output to more than 24Vdc.
The current into the Tach+ terminal must not exceed 20 mA.

Enable Input

ENABLE allows the user to turn off the current to the motor by setting this signal to logic 0. The logic circuitry continues to operate, so the drive "remembers" the step position even when the amplifiers are disabled. However, the motor may move slightly when the current is removed depending on the exact motor and load characteristics. ***If you have no need to disable the amplifiers, you don't need to connect anything to the ENABLE input.***

Using the Fault Output

The MSD has a fault output to indicate if the drive has overheated or if a short circuit has occurred at the motor outputs. The fault output is optically isolated for noise immunity. This makes it more flexible and more reliable, but also more difficult to set up. To connect to 5 Volt logic, consult Figure 11. Max current is 20 mA. For other connections, consult the factory.

The photo transistor turns on when there is a fault. In the circuit shown in Figure 11, the signal will be high (near 5 Volts) when there is no fault. The signal will go low (0 Volts) if a fault occurs.

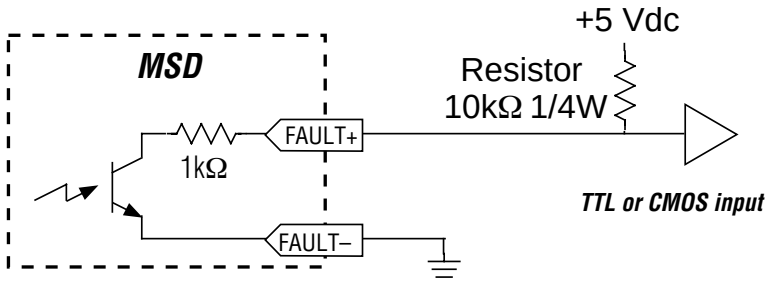

Figure 11 - FAULT OUTPUT

Setting Phase Current

Before turning on the power supply the first time, set the driver for the proper motor phase current. The rated current is printed on the motor label. The current to be set on the MSD is the peak current, not rms, so multiply the motor rating by 1.414 to get the maximum setting.

Refer to page 23 of this manual for current limit settings of Tol-O-Matic MRS series stepper motors. The MSD current is easy to set. Use the simple formula for setting current. Or skip to the table on the next page, find the current setting you want, and set the DIP switches according to the picture.

⚠ **Caution!** Settings higher than recommended will cause motor to overheat.

CURRENT SETTING FORMULA

Refer to Figure 12. Locate the bank of seven switches labeled CURRENT on the front face of the driver. Six of the switches have a value of current printed next to them, such as 0.1 and 1.6. Each switch controls the amount of current, in amperes (A), that its label indicates. There is always a base current of 0.5 A. To add to that, slide the appropriate switches toward their labels

Example

Suppose you want to set the driver for 2.9 Amps per phase. You need the 0.5 A base current plus another 2.0 and 0.4 A.
2.9 (TOTAL) = 0.5 (BASE) + 2.0 + 0.4.
Slide the 2.0 and 0.4 A switches toward the labels as shown in the figure.

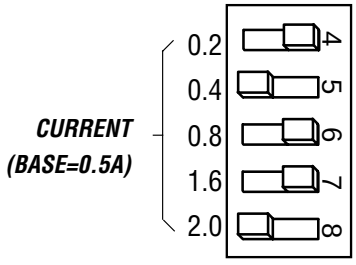

Figure 12 - CURRENT SETTING EXAMPLE

Refer to Figures 13 and 14 for current settings.

Current Setting Table

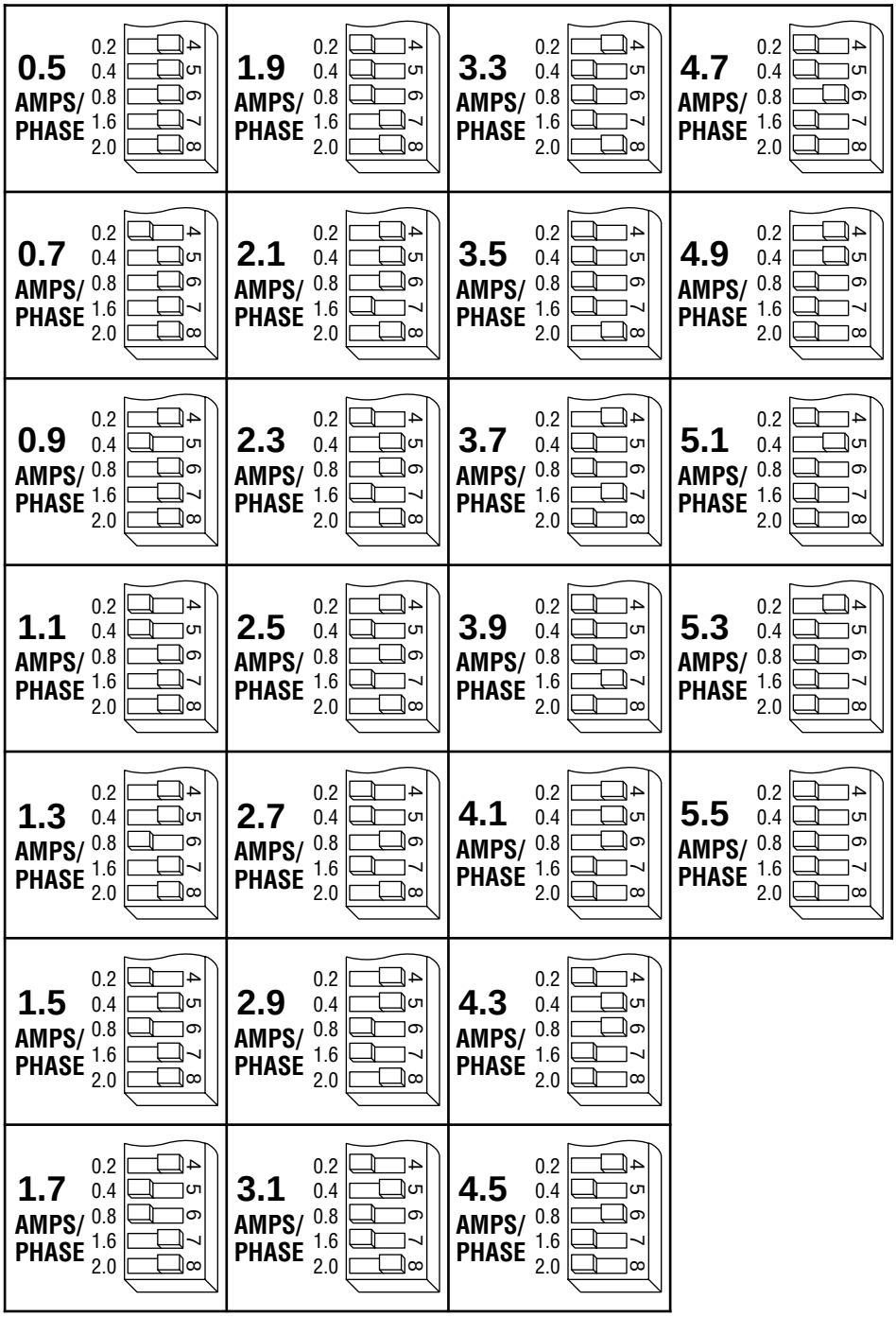

Figure 13 - CURRENT SETTING (0.5 - 3.2 A/phase)

Idle Current Reduction

The MSD drive is equipped with a feature that automatically reduces the motor current by 50% anytime the motor is not moving. This reduces drive heating by approximately 50% and lowers motor heating by 75%. This feature can be disabled if desired so that full current is maintained at all times. This is useful when a high holding torque is required. To minimize motor and drive heating it is strongly recommended that you use the idle current reduction feature unless your application strictly forbids it. Idle current reduction is enabled by sliding CURRENT switch #1 toward the 50% IDLE label, as shown in Figure 15. Sliding the switch away from the 50% IDLE label disables the reduction feature.

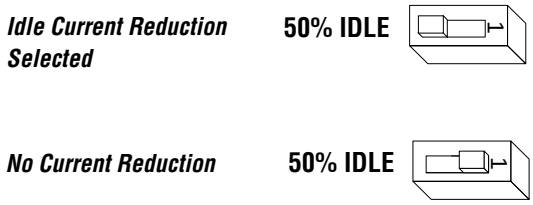

Figure 15 - IDLE CURRENT REDUCTION

Microstepping

Most step motor drives offer a choice between full step and half step resolutions. In full step mode, both motor phases are used all the time. Half stepping divides each step into two smaller steps by alternating between both phases on and one phase on.

Microstepping drives like the MSD precisely control the amount of current in each phase at each step position as a means of electronically subdividing the steps even further. The MSD offers a choice of full and half step as well as 14 other step resolutions. The highest setting divides each full step into 254 microsteps, providing 50,800 steps per revolution when using a 1.8^{o} motor.

In addition to providing precise positioning and smooth motion, microstep drives can be used for motion conversion between different units. The 25,400 step/rev setting is provided as a means of converting motion from metric to English. (There are 25.4 mm in an inch.) Other settings provide step angles that are decimal degrees

continued

(36,000 steps/rev makes the motor take 0.01° steps.) Some settings are used with lead screws. When the drive is set to 2000 steps/rev and used with a 5 pitch lead screw, you get .0001 inches/step.

NOTE:
These resolutions are for the motor only. Actuator performance may not correspond at high microstepping rates due to system compliance and friction.

200 STEPS/REV (FULL)	MICROSTEP RESOLUTION 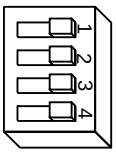	**20000 STEPS/REV (1/100)**	MICROSTEP RESOLUTION 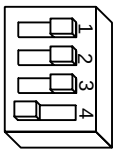
400 STEPS/REV (HALF)	MICROSTEP RESOLUTION 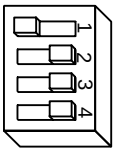	**21600 STEPS/REV (1 arc min)**	MICROSTEP RESOLUTION 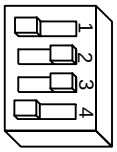
1000 STEPS/REV (1/5)	MICROSTEP RESOLUTION 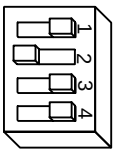	**25000 STEPS/REV (1/125)**	MICROSTEP RESOLUTION 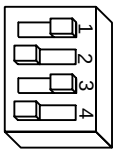
2000 STEPS/REV (1/10)	MICROSTEP RESOLUTION 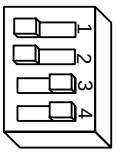	**25400 STEPS/REV (1/127)**	MICROSTEP RESOLUTION 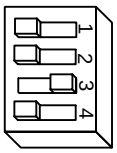
5000 STEPS/REV (1/25)	MICROSTEP RESOLUTION 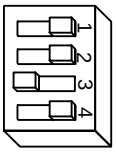	**25600 STEPS/REV (1/128)**	MICROSTEP RESOLUTION 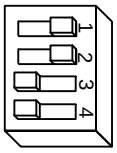
10000 STEPS/REV (1/50)	MICROSTEP RESOLUTION 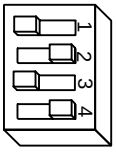	**36000 STEPS/REV (.01°)**	MICROSTEP RESOLUTION 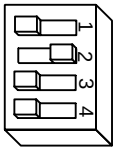
12800 STEPS/REV (1/64)	MICROSTEP RESOLUTION 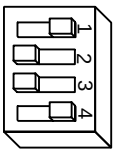	**50000 STEPS/REV (1/250)**	MICROSTEP RESOLUTION 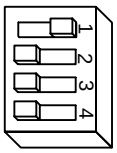
18000 STEPS/REV (.02°)	MICROSTEP RESOLUTION 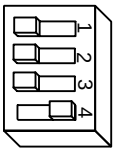	**50800 STEPS/REV (1/254)**	MICROSTEP RESOLUTION 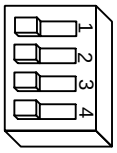

Figure 16 - SELECTING MICROSTEP RESOLUTION

Fault Protection

The MSD provides protection against motor short circuits and excessive drive temperature.

TEMP

If the TEMP light is on the MSD has detected a thermal problem and shut down the amplifiers. The first thing to do is to unplug the drive from the power source. Next, carefully touch the heat sink. If it is very hot, the drive has probably overheated. Usually this means more air flow is needed around the drive.

SHORT

If the SHORT light is on the MSD has detected a short circuit and has shut down the amplifiers. Unplug the drive from the power source. Check the motor wiring carefully. Make sure that the connections to the drive are secure and that any unused motor leads are insulated from the drive, power supply and each other. Check the motor leads for shorts between phases or to ground.

Technical Specifications

Specifications

Amplifiers

Dual, MOSFET H-bridge, 3 state, pulse width modulated switching at 20 kHz. 0.5 - 5.5 Amps/phase peak output current, switch selectable in 0.1 increments. 400 Watts maximum output power. Overcurrent and overtemperature protection. Automatic idle current reduction (defeatable), reduces current to 50% of setting after one second.

Power Supply

Linear, toroidal transformer based for high reliability and low noise. 110 or 220 Vac input, switch selectable, 50-60 Hz. 400 W max., . internally fused with a 2.5A 250Vac fuse, Dc voltage at nominal line voltage: 75 Vdc full load, 90 Vdc no load.

Inputs

Speed, Enable: optically isolated, differential 5 - 24V dc logic, 2200 ohms internal resistor.

Step, Direction: optically isolated, differential 5 - 12V dc logic, 680 ohms internal resistance. (24V dc with external 1000 ohm resistors.)

Wiper: 0 - 5 V dc analog signal. Max recommended pot/joystick impedance: 1K - 5K ohms. Joystick dead zone: ±80 mV. Potentiometer/analog signal dead zone: 40 mV.

In pulse & direction mode, motor steps on falling edge of step input. 0.25 µsec minimum pulse, 2 MHz max step rate. 1 µsec minimum set up time, 50µs minimum hold time for direction signal.

Outputs

Tach & Fault: Optically isolated, uncommitted (open collector, open emitter) photo transistors. 30V, 20 mA max. Tach output is 100 pulses per motor revolution, 50% duty cycle (square wave).

Microstepping

Oscillator/joystick modes: 1/64 step (12,800 s/r) with 1.8° motor.
Pulse & Direction mode: 16 switch selectable resolutions: 200, 400, 1000, 2000, 5000, 10000, 12800, 18000, 20000, 21600, 25000, 25400, 25600, 36000, 50000, 50800 steps/rev.
Self test: 1/2 step.

Oscillator Mode Speed Ranges

LO speed range: 0 - 5 rev/sec
HI speed range: 0 - 25 rev/sec
Accel/decel range: 1 to 250 rev/sec/sec

Physical

Constructed with black anodized aluminum heat sink and heavy gauge steel housing. 3 x 5.3 x 8 inches overall. 7.8 lbs. 70°C max. heat sink temperature. Power, overtemp and overcurrent LEDs. Mounting brackets and switch cover included.

Connectors

European style, pluggable screw terminal blocks. Motor: 4 position. Signal input/output: 8 position. Ac Input: 3 position.

Dimensions

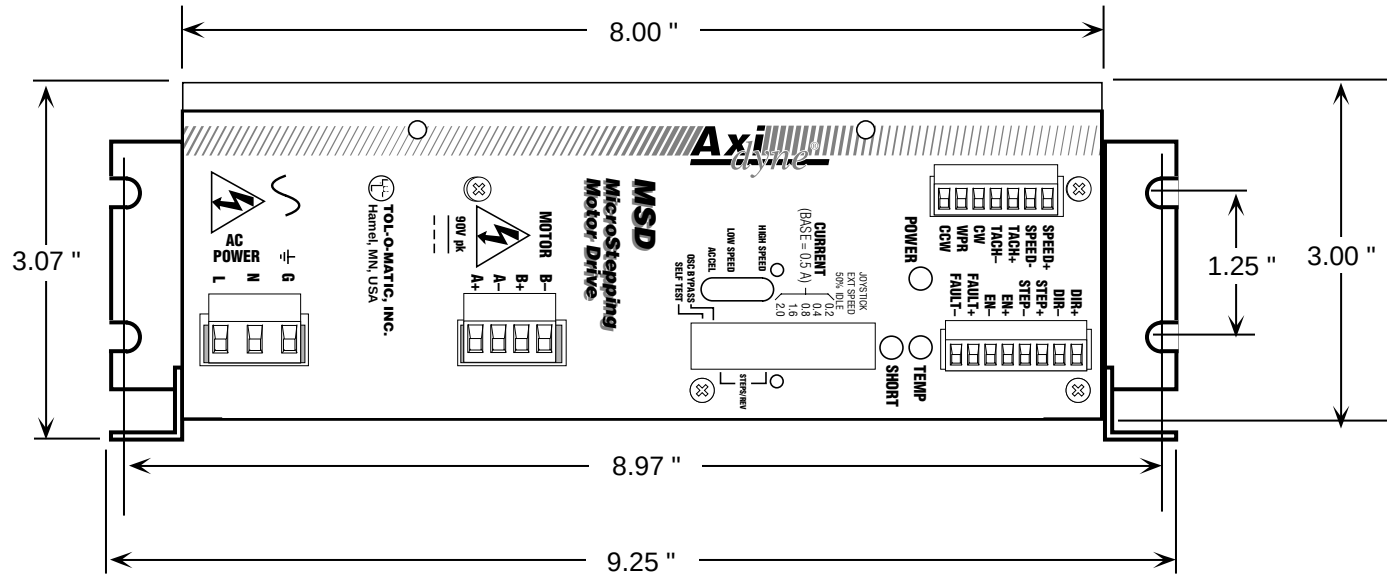
8.00 "
3.07 "
1.25 "
3.00 "
8.97 "
9.25 "
Axidyne
MSD
MicroStepping
Motor Drive
AC
POWER
L
N
G
TOL-O-MATIC, INC.
Hamel, MN, USA
90V pk
MOTOR
B–
B+
A–
A+
CURRENT
(BASE = 0.5 A)
HIGH SPEED
LOW SPEED
ACCEL
OSC BYPASS
SELF TEST
JOYSTICK
EXT SPEED
50% IDLE
0.2
0.4
0.8
1.6
2.0
STEPS/REV
POWER
SHORT
TEMP
SPEED+
SPEED–
TACH+
TACH–
CW
WPR
CCW
DIR+
DIR–
STEP+
STEP–
EN+
EN–
FAULT+
FAULT–

0.06"
2.15"
0.25"
5.30 "
5.45 "
2.02 "

Mounting the MSD

The MSD can be mounted on the wide or the narrow side of the case. Bolt brackets and screws from the accessory bag onto the MSD. If mounting on the narrow side, first remove one of the screws from the heat sink, then put it back with the bracket in place, as shown in Figure 17.

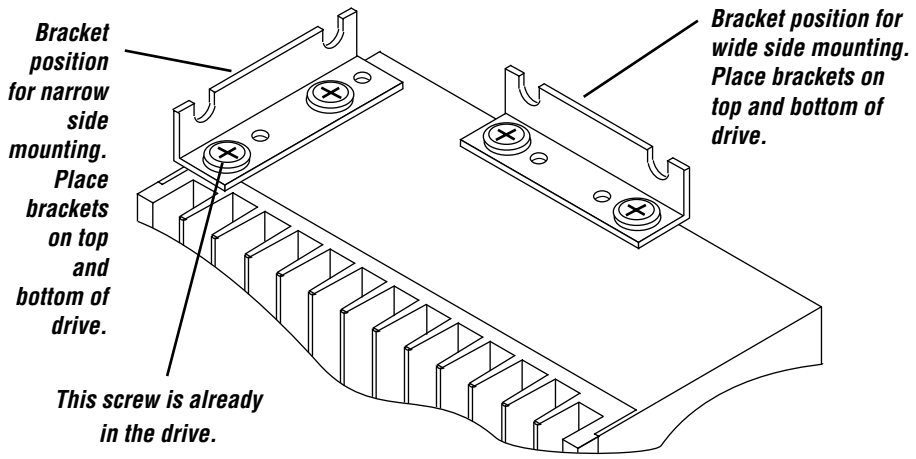

Figure 17 - MOUNTING BRACKETS

USE AND CARE

- *Never use the MSD in a space where there is no air flow or where the ambient temperature exceeds 50°C (12°F).*
- *Never block the fins of the heat sink or the vent holes.*
- *Never put the drive where it can get wet.*
- *Never allow metal particles near the drive.*

Recommended Motors

Motor Data and Dimensions

Tol-O-Matic catalog motor current settings (Figure 18).

MOTOR	WINDING CONNECTION	MAX. PERMISSABLE DRIVE CURRENT SETTING AMPS (PEAK)	ROTOR INERTIA (oz-in^2)	WEIGHT (lbs)
MRS171	parallel	1.0	0.17	0.66
MRS231	parallel	2.20	0.66	1.5
MRS232	parallel	3.60	1.39	2.5
MRS341	parallel	5.50	3.21	3.2
MRS342	parallel	5.50	6.56	5.3
MRS343	parallel	5.50	9.66	7.6

Tol-O-Matic 17 frame motor dimensions (Figure 19).

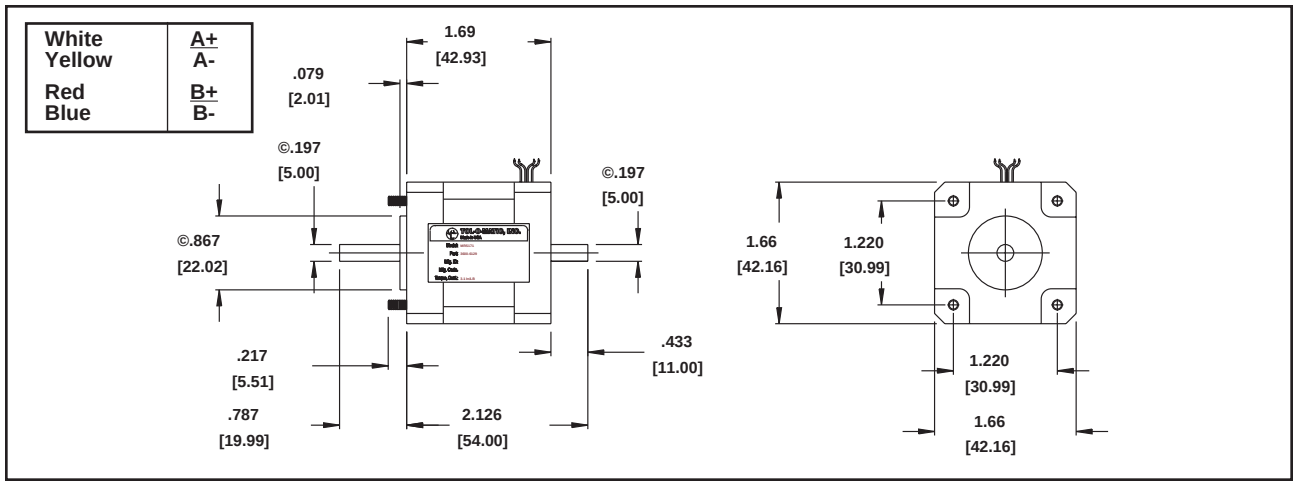

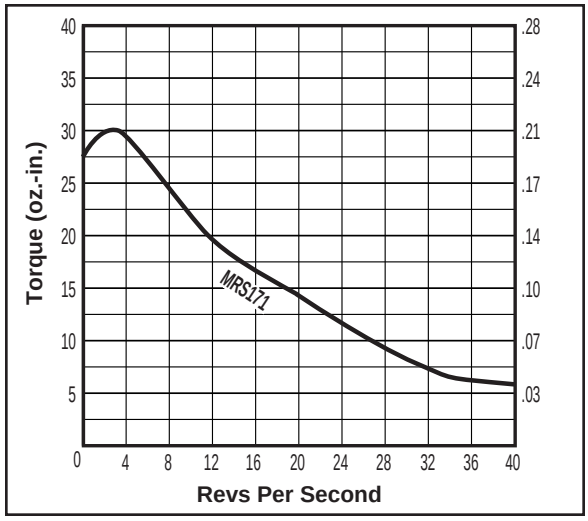

17 frame motor speed/torque characteristics (Figure 20).

Tol-O-Matic 23 frame motor dimensions (Figure 21).

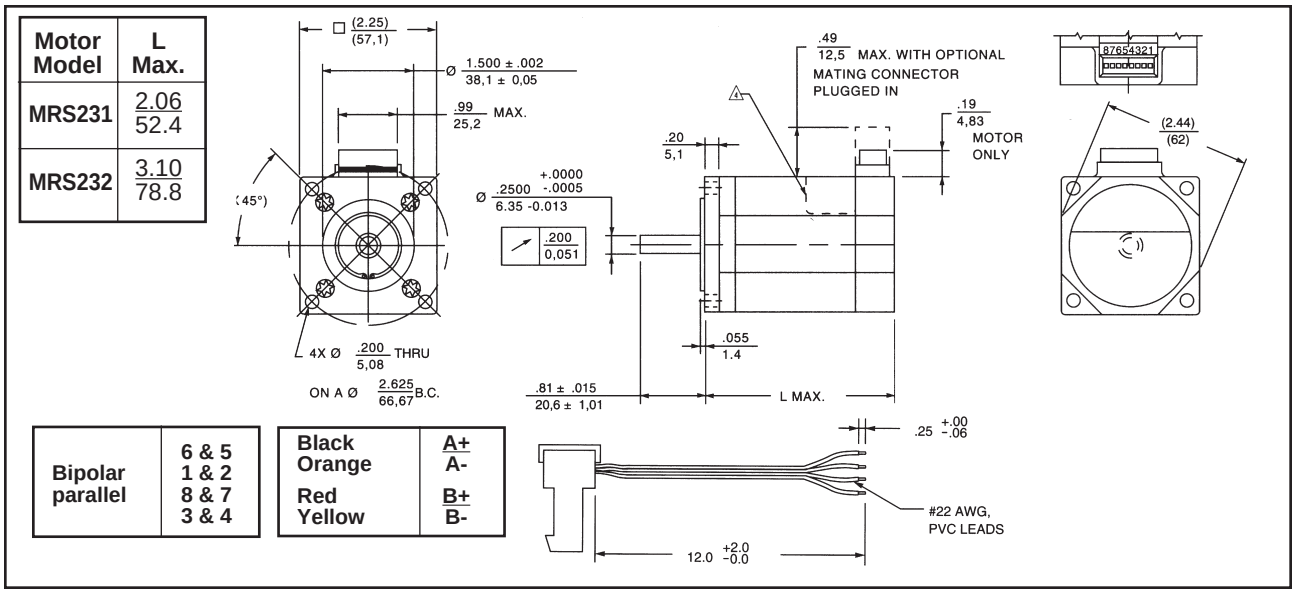

23 frame motor speed/torque characteristics (Figure 22).

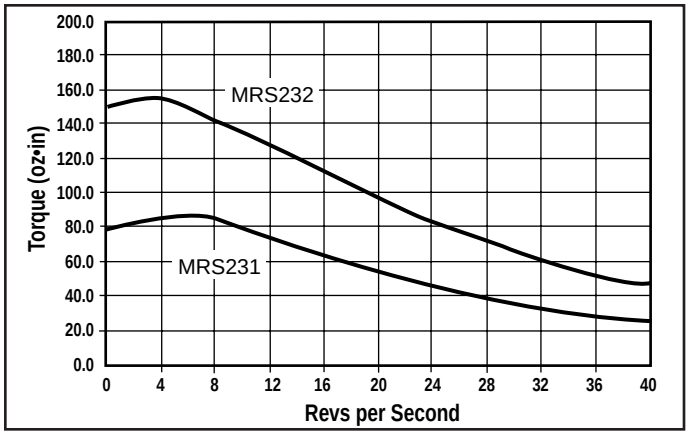

Tol-O-Matic 34 frame motor dimensions (Figure 23).

Motor Model	L Max.
MRS341	2.58 / 65.54
MRS342	3.76 / 95.51
MRS343	3.76 / 95.51

A+	Black
A-	Orange
B+	Red
B-	Yellow

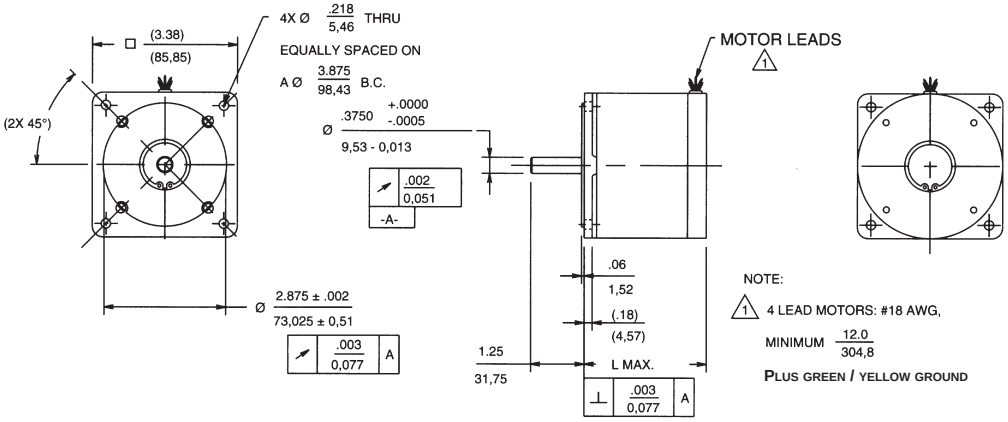

34 frame motor speed/torque characteristics (Figure 24).

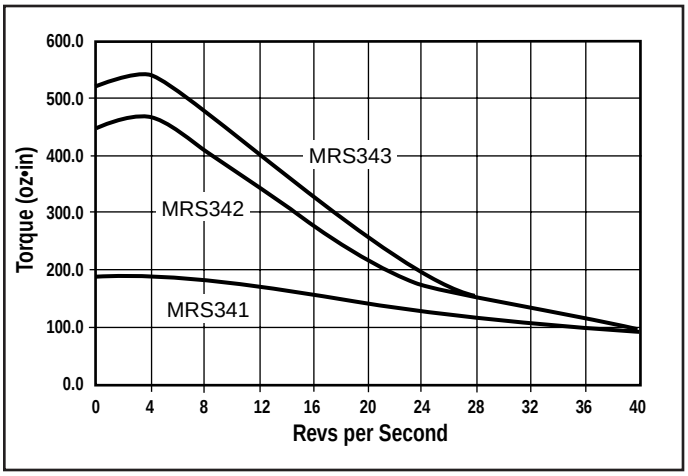

Notes:

TOL-O-MATIC, INC.
3800 County Road 116
Hamel, MN 55340
763.478.8000 Telephone
763.478.8080 Fax
http://www.tolomatic.com

Axidyne®